The Zener diode is like a general-purpose diode and when biased in the forward direction it behaves just like a normal regular diode, but when a reverse voltage is applied to it, the **voltage** remains **constant** for a wide range of currents.

Avalanche Breakdown: There is a limit for the reverse voltage. Reverse voltage can increase until the diode breakdown voltage reaches. This point is called *Avalanche Breakdown* region. At this stage maximum current will flow through the Zener diode. This breakdown point is referred as "Zener voltage". Zener diode is used always in *reverse biased* condition.

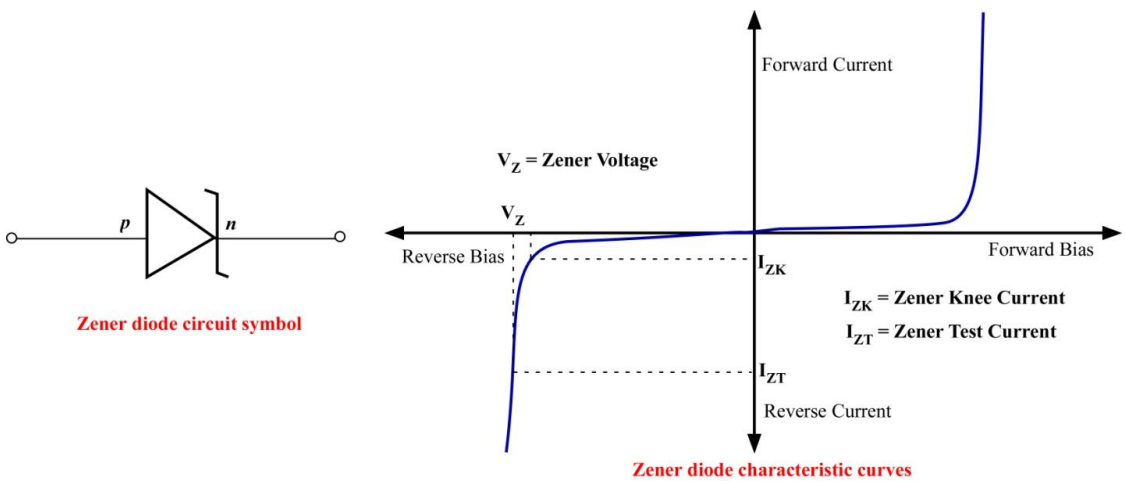

Figure 1: *The current vs voltage curve for a Zener diode. Observe the nearly constant voltage in the breakdown region.*

The forward bias region of a Zener diode is identical to that of a regular diode. The typical forward voltage at room temperature with a current of around 1 mA is around 0.7 volts. (Silicon diodes have a forward knee voltage of approximately 0.7 volts. Germanium diodes have a forward knee voltage of approximately 0.3 volts.) In the reverse bias condition the Zener diode is an open circuit and only a small leakage current is flowing as shown above Fig. 1. As the breakdown voltage is approached the current will begin to avalanche. The initial transition from leakage to breakdown is soft but then the current rapidly increases as shown above Fig. 1. The voltage across the Zener diode in the breakdown region is very nearly constant with only a small increase in voltage with increasing current. At some high current level the power dissipation of the diode becomes excessive and the Zener diode is destroyed. There is a minimum Zener current, $I_{zt(min)}$, that places the operating point in the desired breakdown. There is a maximum Zener current, $I_{z(max)}$, at which the power dissipation drives the junction temperature to the maximum allowed. Beyond that current the Zener diode can be damaged.

Therefore from the I-V Characteristics curve one can see that the Zener diode has a region in its reverse bias characteristics of almost a constant negative voltage regardless of the value of the current flowing through the diode and remains nearly constant even with large changes in current as long as the Zener diodes current remains between the breakdown current $I_{ZK(min)}$ and the maximum current rating $I_{Z(max)}$. This ability to control itself can be used to great effect to regulate or stabilize a voltage source against supply or load variations. The fact that the voltage across the diode in the breakdown region is almost constant turns out to be an important application of the Zener diode as a voltage regulator. This is achieved by using the Zener diode in its reverse bias condition.

I. Zener Diode as Voltage Regulators:

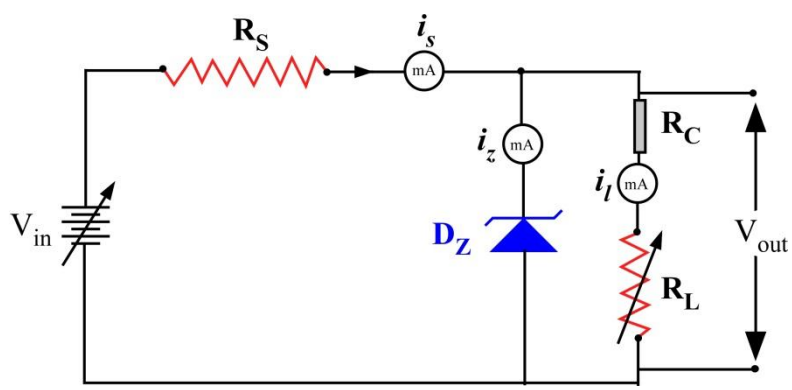

Figure 2: *A typical application of a Zener diode as a voltage regulator is shown in the above figure.*

The function of a regulator is to provide a constant output voltage to a load connected in parallel with it in spite of fluctuation in the supply voltage or the variation in the load current and the Zener diode will continue to regulate the voltage until the diodes current falls below the maximum $I_{Z(max)}$ value in the reverse breakdown region. In breakdown region the voltage across the Zener diode is close to constant over a wide range of currents thus making it useful as a shunt voltage regulator.

The purpose of a voltage regulator is to maintain a constant voltage across a load regardless of variations in the applied input voltage and variations in the load current. A typical Zener diode shunt regulator is shown in Figure 2. The resistor is selected so that when the input voltage is at $V_{in(min)}$ and the load current is at $\boldsymbol{i}_{L(max)}$ that the current through the Zener diode is at least $I_{zk(min)}$. Then for all other combinations of input voltage and load current the Zener diode conducts the excess current thus maintaining a constant voltage across the load. The Zener conducts the least current when the load current is the highest and it conducts the most current when the load current is the lowest. If there is no load resistance, shunt regulators can be used to dissipate total power through the series resistance and the Zener diode. Shunt regulators have an

inherent current limiting advantage under load fault conditions because the series resistor limits excess current.

A zener diode of break down voltage V_z is reverse connected to an input voltage source V_i across a load resistance R_L and a series resistor R_S. The voltage across the Zener will remain steady at its break down voltage V_Z for all the values of zener current $\boldsymbol{i}_Z$ as long as the current remains in the breakdown region. In the above circuit, the Zener diode maintains a constant output voltage $V_0 = V_Z$ independent of variations in load resistance R_L or the variation of input voltage V_i ($> V_Z$) so long as the diode remains in the breakdown region and the input voltage remains within a minimum and maximum voltage.

From the circuit diagram we can write $\mathbf{i}_S = \mathbf{i}_Z + \mathbf{i}_L$

Where, $i_S = \frac{Vi-Vz}{Rs}$, and $i_L = \frac{Vo}{Rl}$

Basically there are two types of regulations such as:

(i) Line Regulation :

In line regulation, series resistance, R_S and load resistance, R_L are fixed, only input voltage, V_{in} is varied. Output voltage, V_0 remains the same at V_Z and $\boldsymbol{i}_L$ remains constant as long as the input voltage is maintained above a minimum value.

$$\delta\, \boldsymbol{i}_Z = \delta\, \boldsymbol{i}_S$$

Thus when load R_L is fixed and input voltage V_i varies then Zener current $\boldsymbol{i}_Z$ and total current $\boldsymbol{i}_S$ change in such to maintain $\boldsymbol{i}_L$ and hence V_0 constant. Any change in V_i appears across the series limiting resistance R_S.

Table – I

Sl. No	$\mathbf{R}_L$ (Ohm)	$\mathbf{V}_i$ (Volts)	$\boldsymbol{i}_S$ (mA)	$\boldsymbol{i}_Z$ (mA)	V_0 (Volts)
1.	"				
2.	**CONSTANT**				
	"				
20.	"				

Graph –I

(*i*) Plot graph between i_Z and i_S to show that $\delta \boldsymbol{i}_Z = \delta \boldsymbol{i}_S$ (Directly proportional)

(*ii*) Plot graph between V_{in} and V_{out} . Find out the breakdown voltage (V_Z) of Zener diode.

(ii) Load Regulation :

In load regulation, input voltage, $\mathbf{V}_i$ remains constant and the load resistance, $\mathbf{R}_L$ is varied. Output voltage remains same, as long as the load resistance is maintained above a minimum value. Since the voltage $\mathbf{V}_Z$ across the Zener remains constant, $\boldsymbol{i}_S$ is *independent of load*. Hence in this case

$$\delta\, \boldsymbol{i}_Z = -\,\delta\, \boldsymbol{i}_L$$

Thus Zener current changes with change in load current due to change in $\mathbf{R}_L$ but output remains constant at $\mathbf{V}_Z$.

Table – II (without R_C) : R_C = A current limiting constant resistor

Sl. No	$\mathbf{V}_i$ (Volts)	$\mathbf{R}_L$ (Ohm)	$\boldsymbol{i}_L$ (mA)	$\boldsymbol{i}_Z$ (mA)	V_0 (Volts)
1.	"				
2.	**CONSTANT**				
	"				
20.	"				

Graph –II

(*i*) Plot graph between I_Z and I_L to show that $\delta\mathbf{I}_Z = -\,\delta\mathbf{I}_L$ (Inversely proportional)

(ii) Plot graph between V_{out} and R_L . Find out the breakdown voltage ($V_{out} = V_Z$) of Zener diode.

Table – III (with R_C) : R_C = A current limiting constant resistor

Sl. No	$\mathbf{V}_i$ (Volts)	$\mathbf{R}_L$ (Ohm)	$\boldsymbol{i}_L$ (mA)	$\boldsymbol{i}_Z$ (mA)	V_0 (Volts)
1.	"				
2.	**CONSTANT**				
	"				
20.	"				

Graph –III

(*i*) Plot graph between I_Z and I_L to show that $\delta\mathbf{I}_Z = -\,\delta\mathbf{I}_L$ (Inversely proportional)

(ii) Plot graph between V_{out} and R_L in the presence of R_C. Find out the breakdown voltage ($V_{out} = V_Z$) of Zener diode which was not possible in Table II because Load R_L draw more current.

II. Voltage Regulator IC 7805:

In the above descriptions, we understood that Zener diode can be used as a voltage regulator but the regulator has two major drawbacks (i) the regulation is not perfect and output voltage increases very slowly with increasing input voltage (ii) maximum current delivery by this type of regulator is limited to few mili-Amp. Hence in modern days, IC based voltage regulators are used commercially. IC 7805 is a series of 78XX voltage regulators. It's a standard practice that the name of the last two digits 05 denotes the amount of voltage that it regulates. Hence a 7805 would regulate 5V and 7806 would regulate 6V and so on. The 7805 IC has 3 pins. Pin 1 takes the input voltage and pin 3 produces the output voltage. The GND of both input and out are given to pin 2.

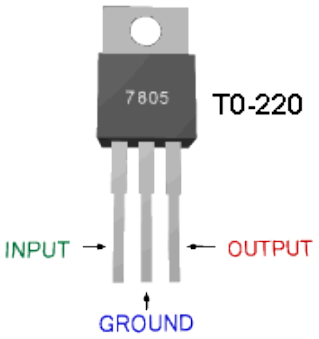

Voltage regulation by IC 7805 is far better than the voltage regulation by using a Zener diode. The detail schematic of IC 7805 is given below.

Internal schematic circuit diagram of LM 78XX integrated circuit (IC)

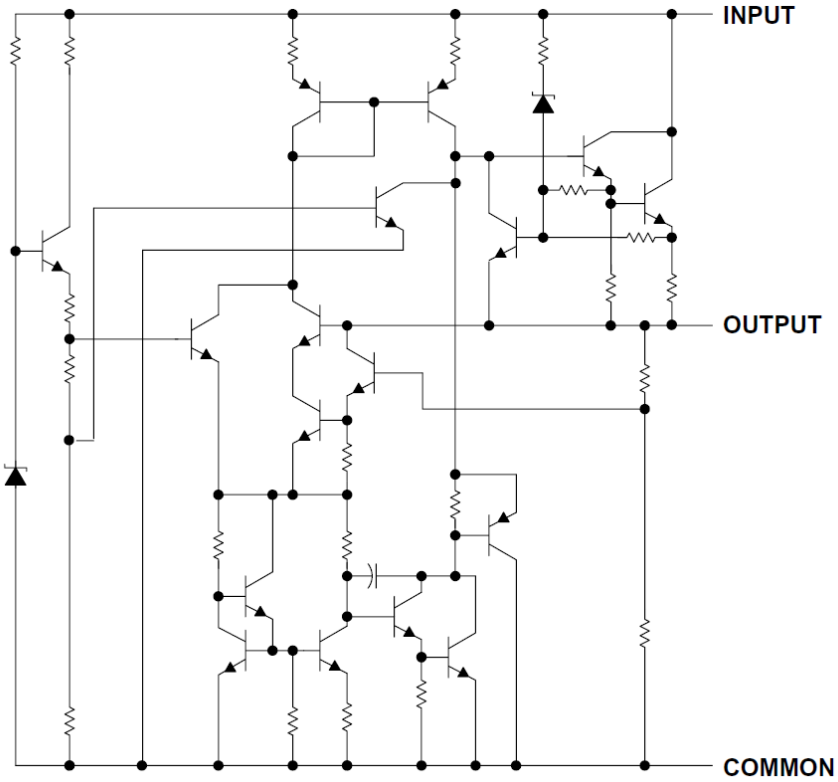

It can be seen clearly that the IC LM 78XX has Zener diode within it along with many feedback circuit. Few of the features of LM78XX are given below.

• Output Current up to 1 A
• Output Voltages: 5, 6, 8, 9, 10, 12, 15, 18, 24 V
• Thermal Overload Protection
• Short-Circuit Protection

For LM7805 the minimum voltage is 7.2 V and maximum voltage is 35 V. The maximum current the load can draw is about 1 Amp.

Circuit Diagram :

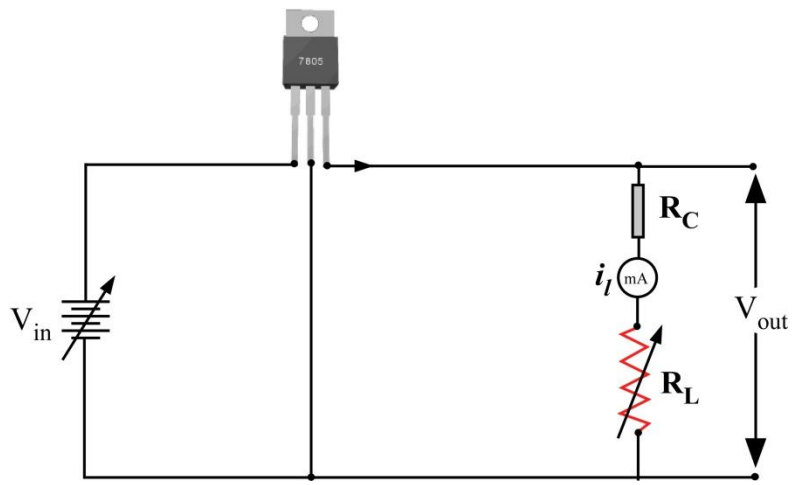

(i) Line Regulation :

In line regulation, output constant current limiting series resistance, R_C and load resistance, R_L are fixed, only input voltage, V_{in} is varied. Output voltage, V_0 remains the same at V_Z and i_L remains constant as long as the input voltage is maintained above a minimum value.

Table – I

Sl. No	$R_C + R_L$ (Ohm)	V_i (Volts)	i_l (mA)	V_0 (Volts)
1.	"			
2.	**CONSTANT**			
	"			
20.	"			

Graph –I

(*i*) Plot graph between V_{in} and V_{out}. Find V_{min} input voltage for which V_{out} is constant to 5 V.

(ii) Load Regulation :

In load regulation, input voltage, $\mathbf{V_i}$ remains constant and the load resistance, $\mathbf{R_L}$ is varied. Output voltage remains same irrespective of load.

Table – II

Sl. No	$\mathbf{V_i}$ (Volts)	$\mathbf{R_L}$ (Ohm)	$\boldsymbol{i_l}$ (mA)	V_0 (Volts)
1.	"			
2.	**CONSTANT**			
	"			
20.	"			

Graph –II

(*i*) Plot graph between V_{out} and R_L.

***